SIKU RA1-50 V3 / RA1-85 V3 TWIN FRESH COMFO



IP24

PRODUCT DESCRIPTION

- for pipe diameter Ø 150 mm
- Telescopic tube 300 mm to 500 mm
- incl. automatic louvre and front panel
- equipped with a plug & play remote control and switch on the housing
- with optical filter change indicator
- (G3 filter, optional F7 filter)
- **incl. hygrostat (measurement of humidity in the room)**
- **Thermal actuator is more heat resistant**
- **Mounting (magnetic) box with additional security**
- serveral devices can be connected to each other (up to 10 units and even more)
- heat recovery due to the ceramic heat exchanger, the ventilation heat losses can be reduced significantly
- allows for moisture balance
- easy mountenence and servicing
- a plug-in assembly is possible
- including overheating protection
- RA1-50 V3 for rooms up to approx. 25 m²
- RA1-85 V3 for rooms up to approx. 40 m²
- for installation in a core drill hole througth the outer wall of a building

TECHNICAL DATA

MODELS	SIKU RA1-50 V3 TWIN FRESH COMFO			SIKU RA1-85 V3 TWIN FRESH COMFO		
SPEED	1	2	3	1	2	3
VOLTAGE (50/60 HZ)	100-240 V			100-240 V		
POWER CONSUMPTION	4,50 W	5,00 W	7,00 W	4,74 W	6,56 W	9,65 W
CURRENT	0,024 A	0,026 A	0,039 A	0,034 A	0,050 A	0,071 A
AIR FLOW RATE IN VENTILATION MODE	20 m³/h	35 m³/h	50 m³/h	36 m³/h	59 m³/h	85 m³/h
AIR FLOW RATE IN REGENERATION MODE	10 m³/h	18 m³/h	25 m³/h	18 m³/h	30 m³/h	43 m³/h
NUMBER OF REVOLUTIONS	310 min-1	800 min-1	1450 min-1	1000 min-1	1500 min-1	2045 min-1
SOUND PRESSURE LEVEL AT 1 M (FREE RADIATION)	22 dBA	29 dBA	32 dBA	29 dBA	35 dBA	44 dBA
SOUND PRESSURE LEVEL AT 3 M (FREE RADIATION)	13 dBA	20 dBA	23 dBA	19 dBA	25 dBA	34 dBA
OUTDOOR SOUND PRESSURE ATTENUATION	40 dBA			40 dBA		
MAX. TEMPERATURE OF TRANSPORTED AIR	from -20°C until +40°C			from -20°C until +40°C		
HEAT RECOVERY EFFICIENCY	up to 88 %			up to 90 %		
DEGREE OF PROTECTION	IP24			IP24		

Printing errors, mistakes and technical changes reserved.

CONSTRUCTION

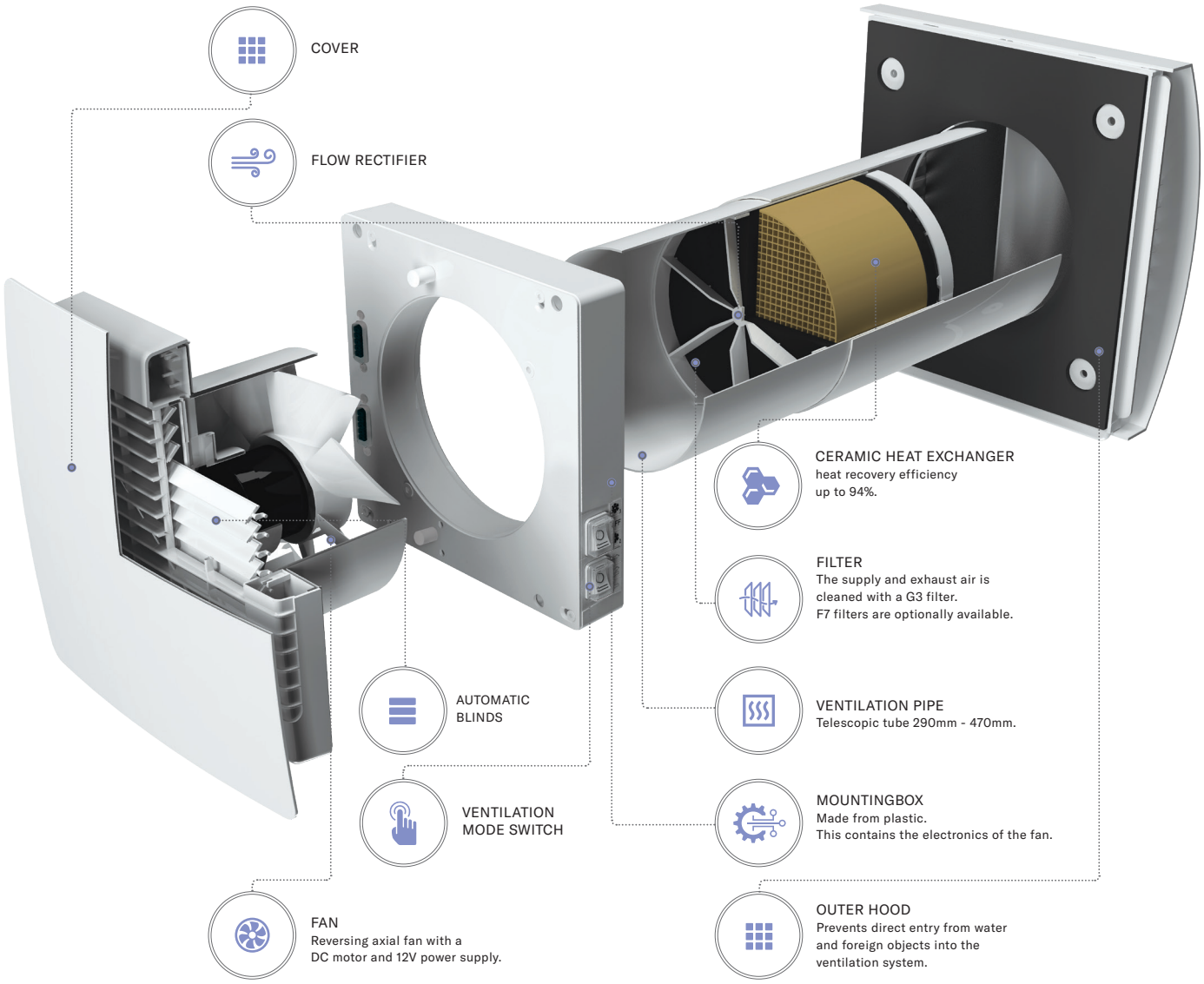

DIMENSIONS (MM)

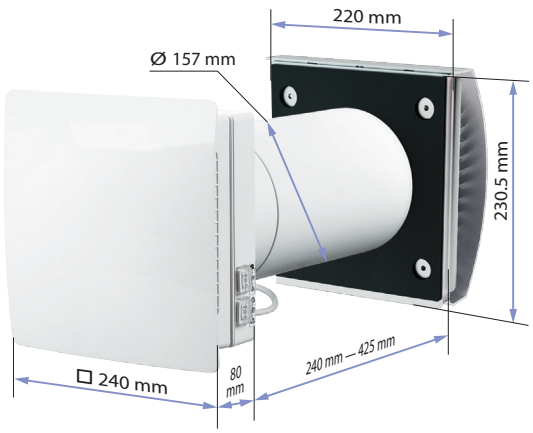

HEAT AND MOISTURE RECOVERY

The warm exhaust air flows through the ceramic heat exchanger from the room and transfers the thermal energy and humidity to the heat exchanger. After the ceramic heat exchanger has heated up, the ventilation system switches to supply air mode (70 seconds).

The fresh, cold outside air flows through the heat exchanger and removes the stored heat and humidity. After the heat exchanger has cooled down, the ventilation system switches to exhaust air mode (70 seconds).

APPLICATION EXAMPLES

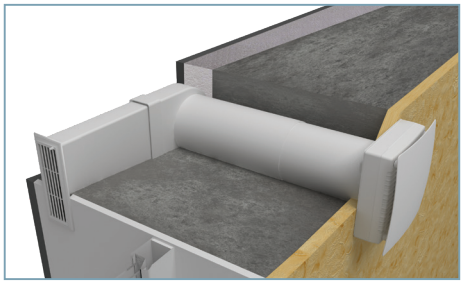

SIKU NP 60x204-0021
Corner mounting kit
(Item no. 30611)

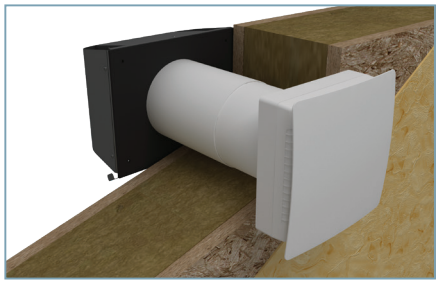

Installation in a thin wall thickness with the use of the outer hood (Item no. 50516)

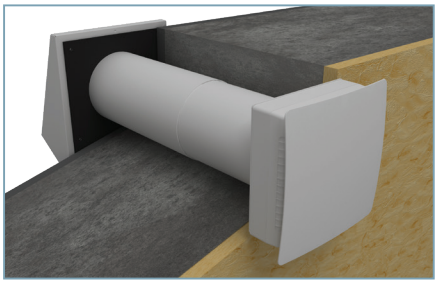

Installation in a standard wall thickness with the use of the outer hood (Item no. 50530)

AVAILABLE MODELS	ITEM NUMBER	PACKAGING UNIT
SIKU RA1-50 V3 Twin Fresh Comfo	(Item no. 50709)	2 Pcs
SIKU RA1-85 V3 Twin Fresh Comfo	(Item no. 50728)	2 Pcs

ACCESSORIES	ITEM NUMBER	PACKAGING UNIT
Filter G3 for 150 mm Pipe diameter (2 Pcs)	(Item no. 30464)	50 Pcs
Filter F7	(Item no. 50743)	5 Pcs
SIKU NP 60x204-0021 (Corner mounting kit white)	(Item no. 30611)	6 Pcs
SIKU NP 60x204-0082 (Corner mounting kit chrome)	(Item no. 50560)	1 Pcs
Remote control for SIKU RA1-50 V3 / RA1-85 V3	(Item no. 50170)	10 Pcs
AHS160GRAY (for thin walls)	(Item no. 50516)	4 Pcs
AH150STAINLESS STEEL (made of polished stainless steel)	(Item no. 50530)	8 Pcs

Printing errors, mistakes and technical changes reserved.